版数 VER.	年月日 DATE	CN NO.	変更内容 DESCRIPTION	製図 DR.	担当 CHK.	査閲 APPD.	承認 APPD.
2	27/JUN/2017	021842	Correct the shape difference	-	K.MIKAWA	K.KUME	M.SHIMADA

図面番号(DRAWING NO.) SJ116250

WISDOM承認 2017/08/01

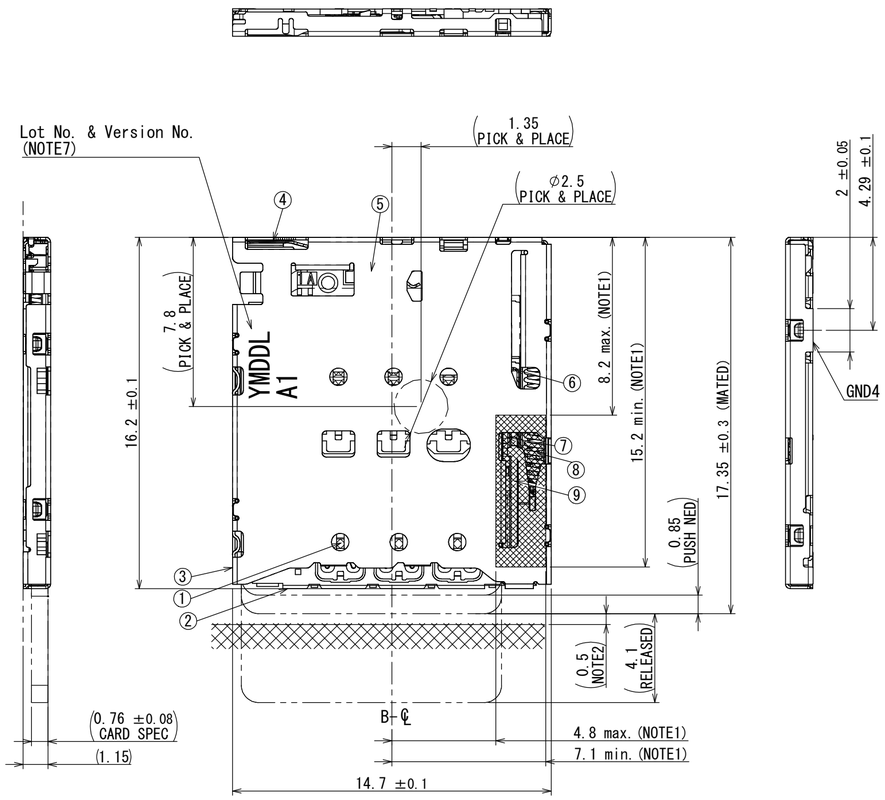

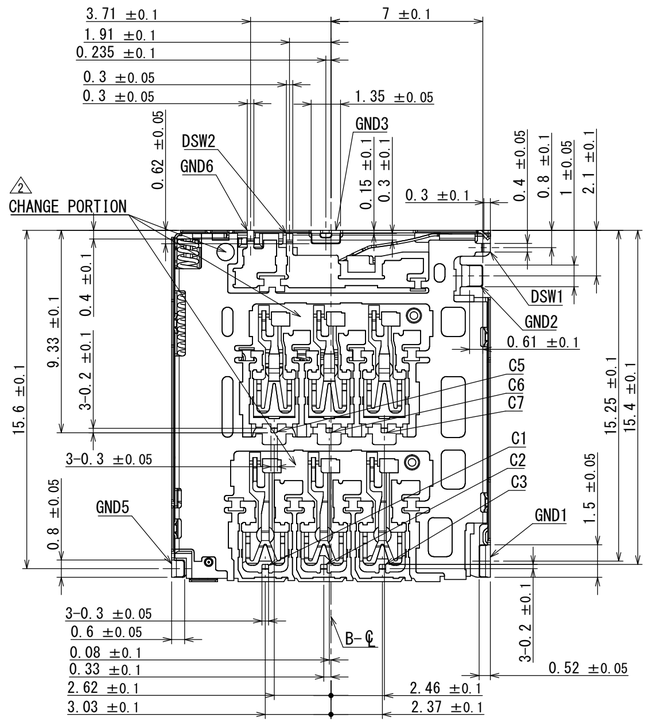

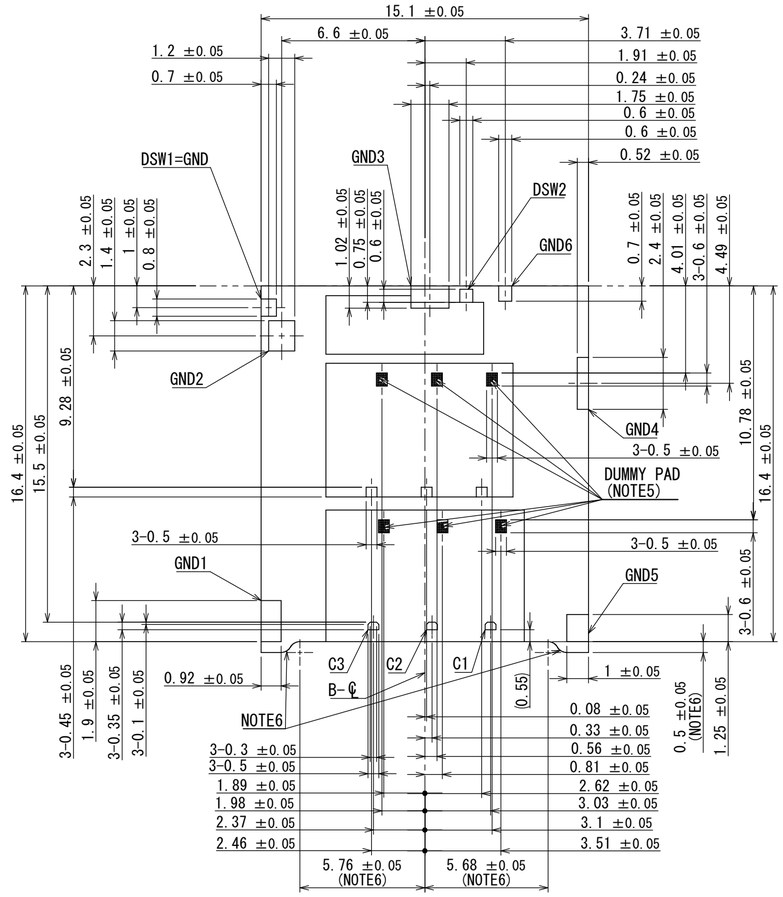

APPLICABLE PCB DIMENSION

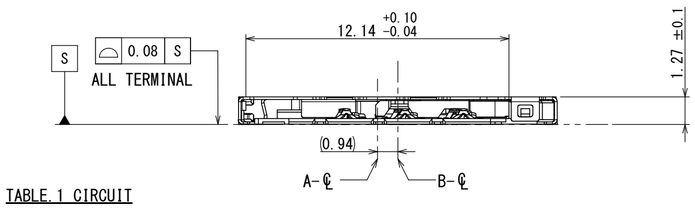

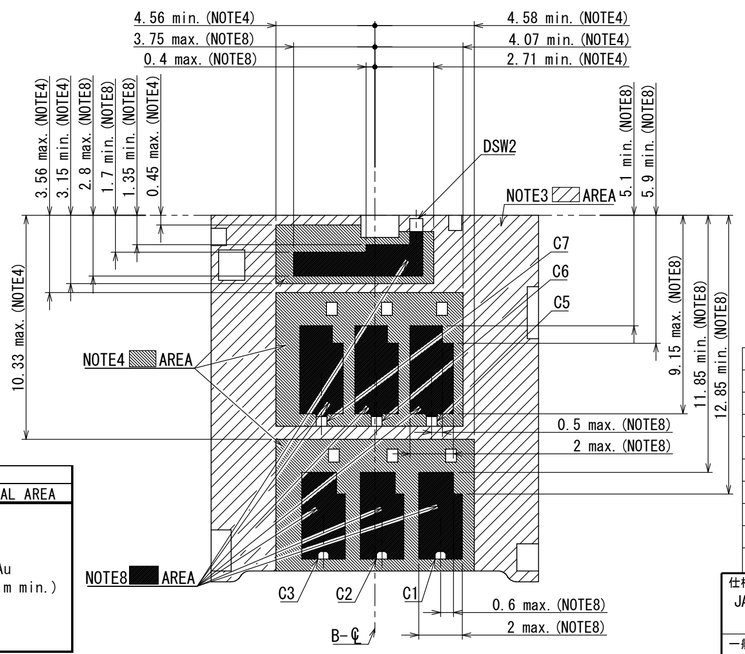

PCB RESTRICTED AREA

NOTE1. OTHER COMPONENTS CANNOT TOUCH OR REST ON TOP OG THIS AREA.
NOTE2. CARD STOPPER POSITION.
NOTE3. ONLY GND PATERN AND GND VIA HOLE IN ALLOWED IN THIS AREA.
NOTE4. NO PATTERN AND VIA HOLE IN THIS AREA.
NOTE5. DUMMY PAD SHOULD BE ELECTRICALLY ISOLATED.
(No connection to GND on something else)
SHOULD NOT SOLDER ON THIS PAD.
(No solder on this PAD)
NOTE6. PCB CUTOUT AREA.
NOTE7. LOT INFORMATION IS SHOWN AS BELOW.
i.e. 7 6 2 7 1 A 1
VERSION NO.
PRODUCTION LINE NO.
PRODUCTION DATE(YMDD)
NOTE8. ONLY SAME LINE PATTERN AND VIA HOLE AS INCLUDED PAD ALLOWED IN THIS AREA.

TABLE.1 CIRCUIT

	WITHOUT CARD	CARD MATED
DETECTION SWITCH	④ ○ ○ ⑤ ↓ GND	④ ○ ○ ⑤ ↓ GND

TABLE.2
PIN ASSIGNENMENT

C1	Vcc
C2	RST
C3	CLK
C5	GND
C6	Vpp
C7	I/O

TABLE.3 FINISH

PART No.	PART NAME	BASE PLATING		TOP PLATING	
		CONTACT AREA	TERMINAL AREA	CONTACT AREA	TERMINAL AREA
①	CONTACT	Ni (2～6μm)	Ni (1～6μm)	Au (0.3μm min.)	Au (0.03μm min.)
③	COVER	-	Ni (0.5～6μm)	-	
④	GROUND FRAME (DSW1)	Ni (1～6μm)		Au (0.1μm min.)	
⑤	DETECTION SWITCH (DSW2)				

符号 NO.	名称 DESCRIPTION	個数 QTY.	材料 MATERIAL	仕上 FINISH	備考 REMARKS
9	CAM FOLLOWER	1	STAINLESS STEEL		
8	SPRING	1	STAINLESS STEEL		
7	EJECT BAR	1	GLASS FILLED Ny		
6	EJECT PLATE	1	STAINLESS STEEL		
5	DETECTION SWITCH (DSW2)	1	COPPER ALLOY	Au OVER Ni (TABLE 3)	
4	GROUND FRAME (DSW1)	1	COPPER ALLOY	Au OVER Ni (TABLE 3)	
3	COVER	1	STAINLESS STEEL	Au OVER Ni (TABLE 3)	
2	HOUSING	1	GLASS FILLED LCP		
1	CONTACT	6	COPPER ALLOY	AU OVER Ni (TABLE 3)	

仕様書(SPECIFICATION) JACS-11101
第1版(ORIGINAL DATE) 25/SEP/2015
製図 DR. -
担当 CHK. K.MIKAWA
査閲 APPD. -
承認 APPD. M.SHIMADA
一般公差(GENERAL TOLERANCE)
寸法(DIMENSION): . ±0.8; .× ±0.4; .×× ±0.1; .×××±
角度(ANGLES): ×° ±; ×°×′ ±
単位(UNIT) : mm
尺度(SCALE) 5:1
シリーズ(SERIES) SF56
名称(TITLE) SF56K006VBA
質量(MASS) -
日本航空電子工業株式会社
JAPAN AVIATION ELECTRONICS INDUSTRY, LTD.
図面番号(DRAWING NO.) SJ116250
SIZE A2
版数(VER.) 2

JAE-CONNECTOR.COM
Reference Only

JAE Connector DIV. Proprietary.Copyright(C) 2015, Japan Aviation Electronics Industry, LTD.

DCF-C-213H(12.08)