Apr.1.2017 Copyright 2017 HIROSE ELECTRIC CO., LTD. All Rights Reserved.

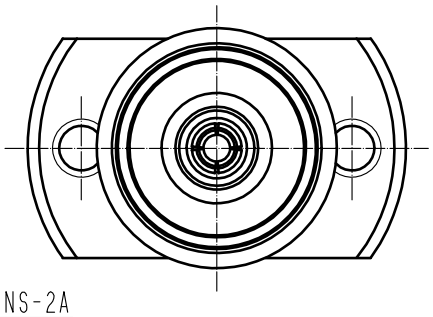

1 When mating the connector, please hold milling area of 5.8±0.2 with spanner not to place stress on PCB by the torque.

2 0-80UNF-2B Screw tightening torque is 0.09N・m.

3 Please use a PCB mounting screw of the length of L(mm) the length of L(mm) is PCB thickness t1(mm) + spring washer thickness t2(mm) + 2(mm).
Please use a screw with a spring washer.

4 Resist of inside of φ4.35±0.02(Ground pad) is prohibited.

△1 5 Recommended PCB thickness t1 is greater than 1.6mm.

△1 6. This connector should be use for test port only.

RoHS COMPLIANT

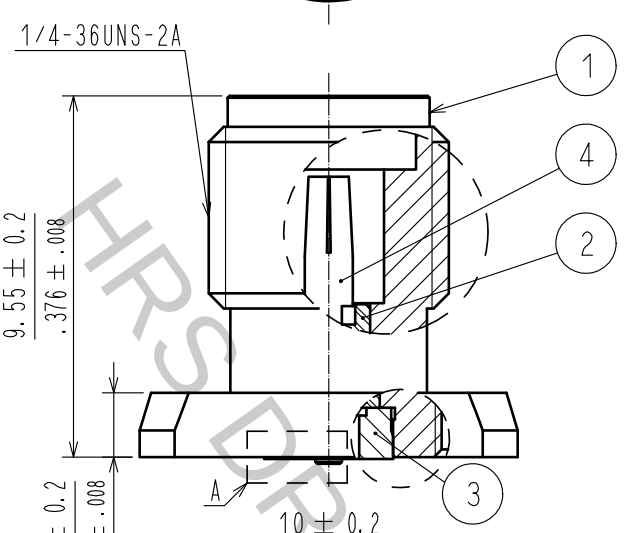

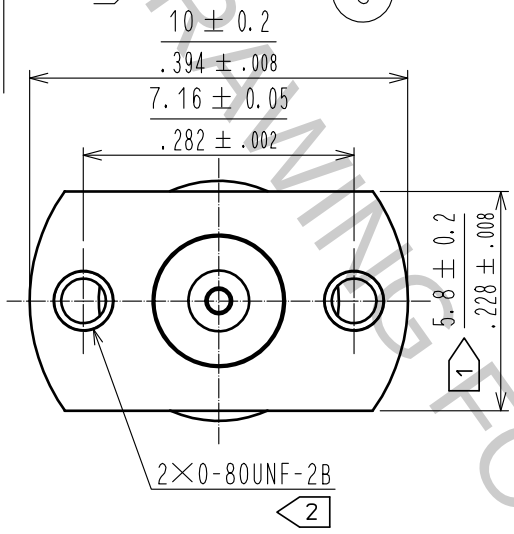

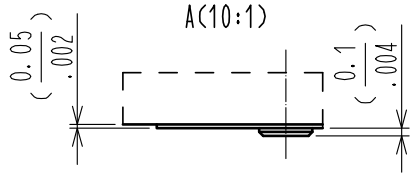

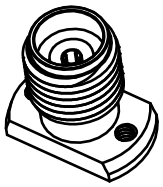

Mounting drawing(2:1)

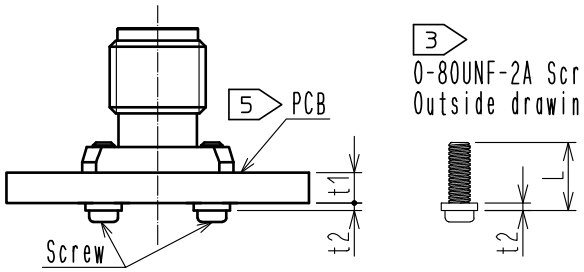

Recommended land pattern drawing

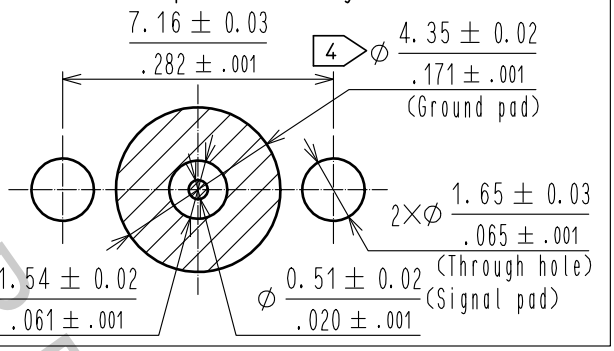

HRS DRAWING FOR REFERENCE

NO.	MATERIAL	FINISH , REMARKS	NO.	MATERIAL	FINISH , REMARKS
2	PTFE		4	BERYLLIUM COPPER	GOLD PLATING
1	STAINLESS STEEL	PASSIVATE	3	STAINLESS STEEL	GOLD PLATING

UNITS [mm/in]	SCALE		COUNT	DESCRIPTION OF REVISIONS	DESIGNED	CHECKED	DATE
	5 : 1	△1	2	DIS-D-00001840	TP. MATSUMOTO	TS. NOBE	17.01.30

HIROSE ELECTRIC CO., LTD.

APPROVED	: KY. SHIMIZU	16.08.30	DRAWING NO.	EDC-366760-00-01
CHECKED	: TO. KATAYAMA	16.08.30	PART NO.	HK-R-SR2-1
DESIGNED	: TP. MATSUMOTO	16.08.29	CODE NO.	CL338-0003-0-00 △1 1/1
DRAWN	: TP. MATSUMOTO	16.08.29		

FORM HC0011-5-51